DRIP EDGE FASCIA

WITHOUT CONTINUOUS CLEAT

INSTALLATION INSTRUCTIONS

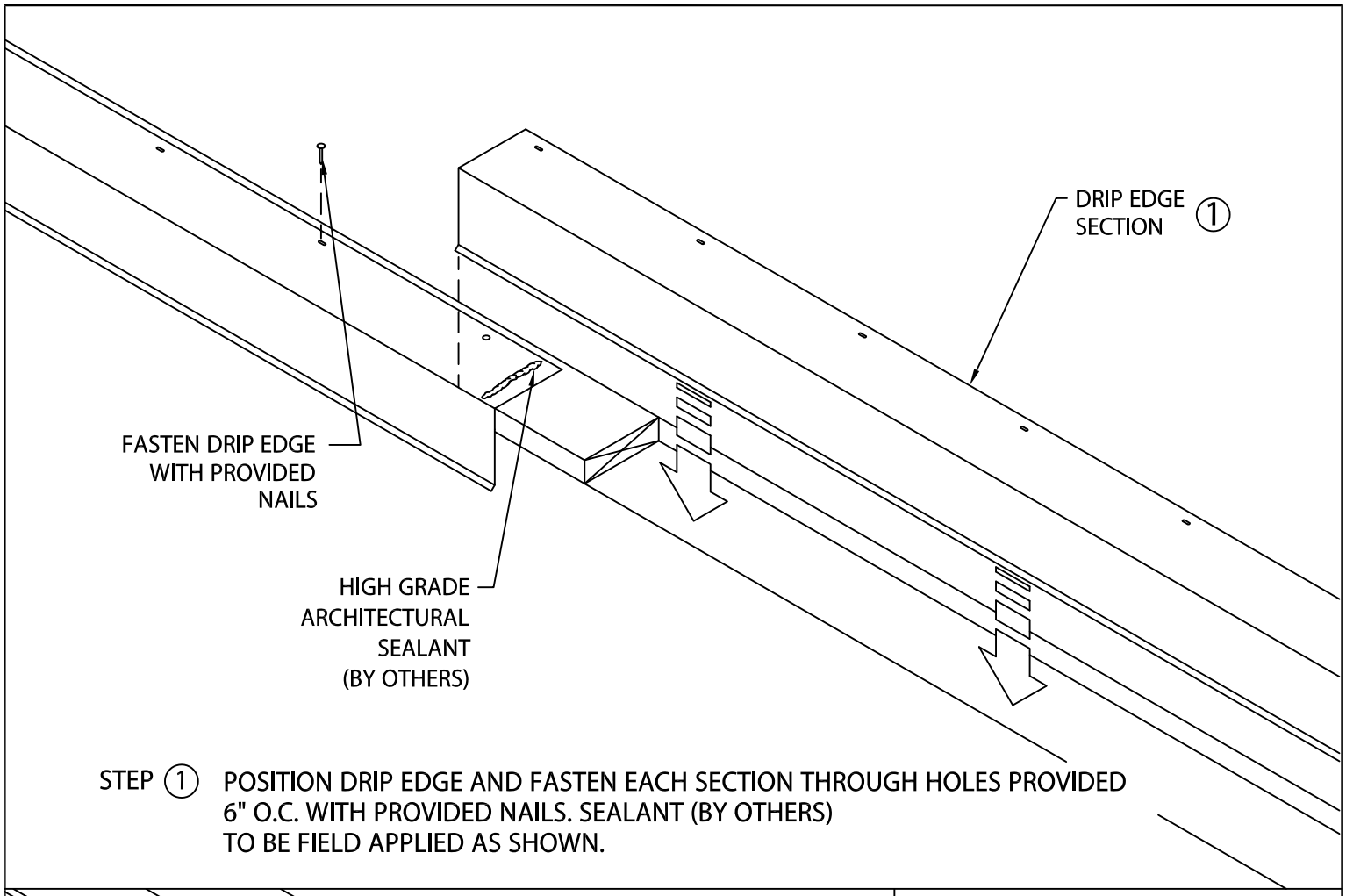

STEP 1 POSITION DRIP EDGE AND FASTEN EACH SECTION THROUGH HOLES PROVIDED 6" O.C. WITH PROVIDED NAILS. SEALANT (BY OTHERS) TO BE FIELD APPLIED AS SHOWN.

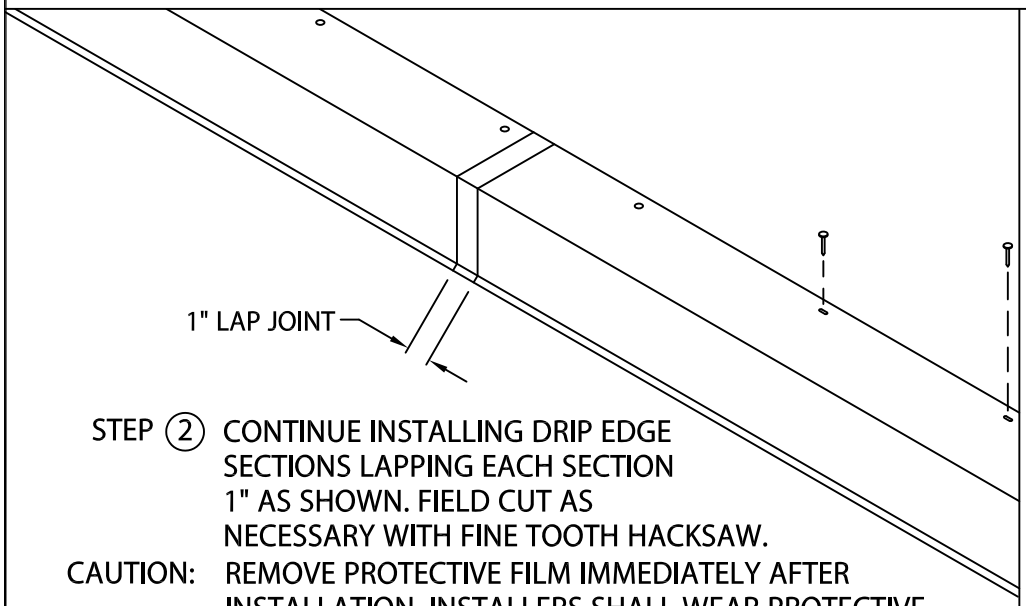

STEP 2 CONTINUE INSTALLING DRIP EDGE SECTIONS LAPPING EACH SECTION 1" AS SHOWN. FIELD CUT AS NECESSARY WITH FINE TOOTH HACKSAW.

CAUTION: REMOVE PROTECTIVE FILM IMMEDIATELY AFTER INSTALLATION. INSTALLERS SHALL WEAR PROTECTIVE EYEWEAR TO PREVENT INJURY.

TYPICAL INSTALLATION

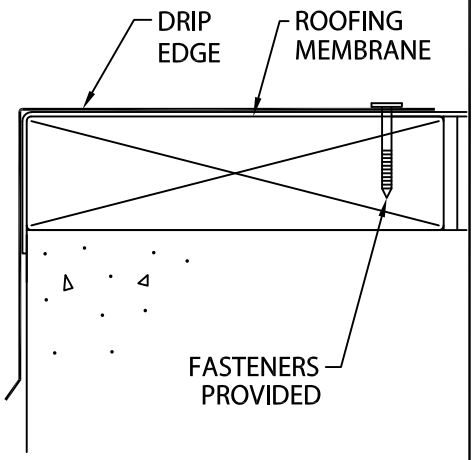

HICKMAN EDGE SYSTEMS

Phone: 828-676-1700

www.hickmanedgesystems.com

DATE: 01/27/22	SHT.#___ OF ___	
DRN BY: MLM	DWG# 64110-37727	A
CKD BY: MM		